MOOD FIRE

e-MatriX | 800/650 III

Specifications

Exterior dimensions WxHxD in mm
1001 x 1008 x 535

Fire display WxHxD in mm
847 x 650 x 351

System
e-MatriX burner

Decoration
Log set / White Pebble / Acrylic Ice

Back walls
Back wall smooth steel

Remote
Via app and Bluetooth remote

Power
2,0 kW

Operating system
-

Energy label
-

Options (at a surcharge)
Non-reflective glass
Black glass back wal
Top Light
Bottom Light
Wall bracket
Water pump

DECORATION OPTIONS
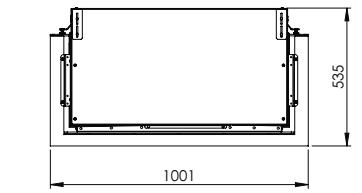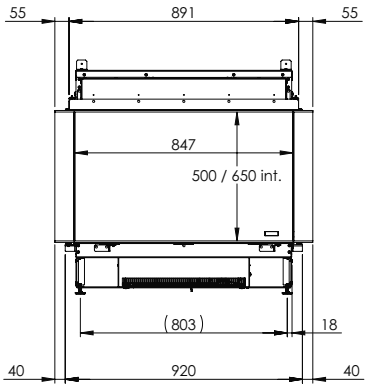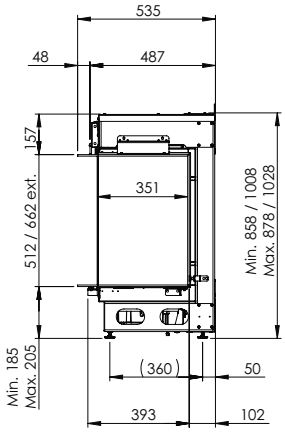
Heating functionality:	Yes
Flue material:	-
Watts:	2250 W
Volts:	230-240 V
Water consumption:	0,15 l/h
Water pressure:	0,5-8 Bar
Water connection:	1/2" - 3/4" Inch